Data Structures

5. List ADT

Roadmap

- List as an ADT
- An array-based implementation of lists

- Introduction to linked lists
- A pointer-based implementation in C++
- Variations of linked lists

Examples of Everyday List

- Everyday usage of the term "list" refers to a linear collection of data items
  - Groceries to be purchased
  - Ingredients of a recipe
  - Job to-do list
  - List of assignments for a course
  - List of courses for summer semester

- Can you name some others??

List (1)

- A collection of items of the same type
- A flexible structure that can grow and shrink on demand

- Elements can be:
  - Inserted
  - Accessed
  - Deleted

  at any position!

List (2)

- A list is a sequence of zero or more elements of a given type

- Represented by a comma-separated sequence of elements

$$a_1, a_2, a_3, \ldots, a_n$$

  - Where $n \geq 0$ and each a_i is of type `element_type`

- Number of elements n determines the length of the list
  - If $n \geq 1$
    - a_1 is the first element
    - a_n is the last element
  - If $n = 0$
    - List has no elements (empty list)

List (3)

- Elements of a list can be linearly ordered according to their position
  - a_i precedes a_{i+1} for `i = 1,2,3…n-1`
  - a_i follows a_{i-1} for `i = 2,3,4…n`
- Element a_i is at position i

Properties of Lists

- Can have a single element
- Can have no elements
- Can be list of lists
- Can be concatenated together
- Can be split into sub-lists

List as an ADT

- We will look at the list as an abstract data type
  - Homogeneous
  - Finite length ??
  - Sequential elements

- Is this information sufficient for defining ADT?

Basic Operations (1)

- Create the list
  - The list is initialized to an empty state
- Determine whether the list is empty
  - Determine whether the list is full
- Find the size of the list
- Destroy, or clear, the list
- Insert an item in the list at the specified location
- Delete an item from the list at the specified location
- Replace an item at the specified location with another item
- Retrieve an item from the list at the specified location
- Search the list for a given item
- Traverse (iterate through) the elements of the list

Basic Operations (2)

- `INSERT(x, p, L)`
  - Insert x at position p in list L
  - If list L has no position p, the result is undefined
- `RETRIEVE(p, L)`
  - Return the element at position p on list L
- `LOCATE(x, L)`
  - Return the position of x on list L
- `DELETE(p, L)`
  - Delete the element at position p on list L

Basic Operations (3)

- `MAKENULL(L)`
  - Causes L to become an empty list and returns position `END(L)`
- `NEXT(p, L)`
  - Return the position following p on list L
- `PREVIOUS(p,L)`
  - Return the position preceding position p on list L
- `FIRST(L)`
  - Returns the first position on the list L

Basic Operations (4)

- `PRINTLIST(L)`
  - Print the elements of L in order of occurrence

- And more …

List as a Data Structure (1)

- We know the ADT of the list, how to implement it?

- Create a List class, containing at least the following function members
  - Constructor
  - `isEmpty()`
  - `insert()`
  - `delete()`
  - `print()`

- What are the other function members?
  - `isFull(), listSize(), retrieve(), replace(), search(), clearList( ),` …

List as a Data Structure (2)

- Implementation involves
  - Defining data members
  - Defining function members from design phase

- In terms of implementation, there are two possible approaches
  - Array-based implementation of list
  - Pointers-based implementation of list (called Linked List)

Array-Based Implementation of Lists

Array-Based Implementation

- An array is a viable choice for storing list elements
  - Elements are sequential
  - Array is a commonly available data type
  - Algorithm development is easy

- Normally sequential orderings of list elements match with array indices

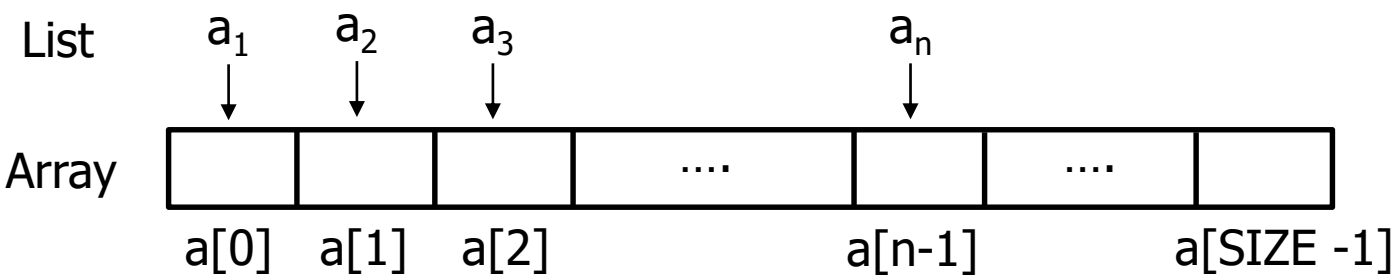

Implementing Operations

- Constructor
  - Static array allocated at compile time
- `isEmpty`
  - Check if `size == 0`
- `traverse/ print`
  - Use a loop from 0th element to `size - 1`
- `insert`
  - Shift elements to right of insertion point
- `delete`
  - Shift elements back

Insertion of a new object

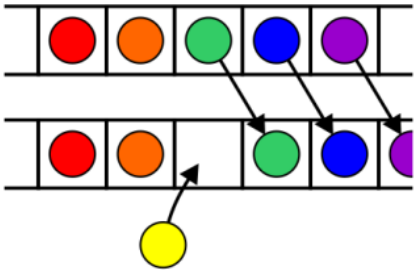

Removal of an object

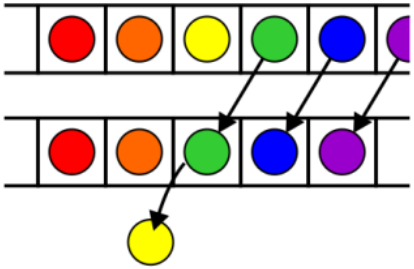

Inefficiency of Array-Based Implementation

- `insert()`, `delete()` functions inefficient for dynamic lists
  - Frequent changes
  - Many insertions and deletions

List Class with Static Arrays - Problems

- Stuck with "one size fits all"
  - Could be wasting space
  - Could run out of space

- Better to have instantiation of a list by specifying the capacity (i.e., size)

- Consider creating a List class with dynamically-allocated array

Dynamic Allocation of List Class (1)

- Changes required in data members
  - Eliminate constant declaration for `CAPACITY/SIZE`
  - Data member to store capacity specified by client program

- Little or no changes required for many function members
  - `isEmpty()`
  - `display()`
  - `delete()`
  - `insert()`

Dynamic Allocation of List Class (2)

- Now possible to specify different sized lists

```
cin >> maxListSize;
List aList1 (maxListSize);
List aList2 (500);
```

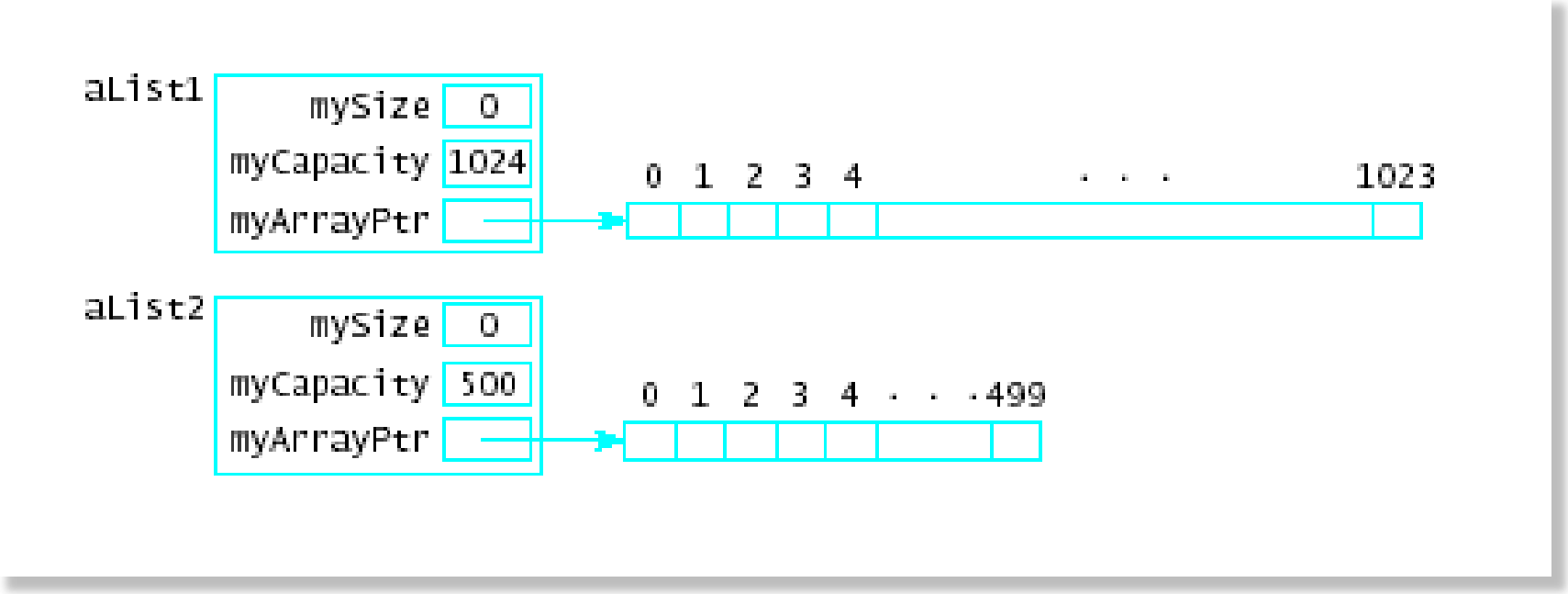

Implementation of List Class

- Problem 1: Array used has fixed capacity
  - If larger array needed during program execution
  - Allocate, copy smaller array to the new one

- Problem 2: Class bound to one type at a time
  - Create multiple List classes with differing names
  - Use class template

Any Question So Far?

Linked List Using Pointers-Based Implementation of Lists

Linked List

- Linked list nodes composed of two parts
  - Data part
    - Stores an element of the list
  - Next part
    - Stores link/pointer to next element
    - Stores Null value, when no next element

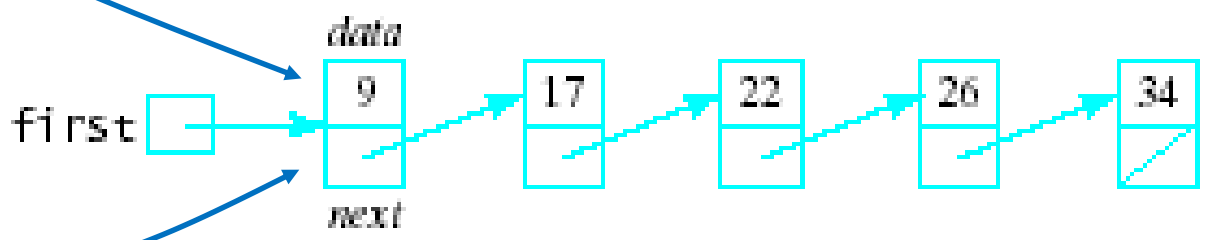

Simple Linked List Class (1)

- We use two classes: Node and List
- Declare Node class for the nodes
  - `data:` double-type data in this example
  - `next:` a pointer to the next node in the list

```
class Node {
   public:
      double   data;   // data
      Node*    next;   // pointer to next
};
```

Simple Linked List Class (2)

- Declare List, which contains
  - `head`: a pointer to the first node in the list
  - Since the list is empty initially, `head` is set to `NULL`

```
class List {
    public:
        List(void) { head = NULL; } // constructor
        ~List(void);                // destructor

        bool IsEmpty() { return head == NULL; }
        Node* InsertNode(int index, double x);
        int FindNode(double x);
        int DeleteNode(double x);
        void DisplayList(void);
    private:
        Node* head;
};
```

Simple Linked List Class (3)

Operations of List

- `IsEmpty`: determine whether or not the list is empty
- `InsertNode`: insert a new node at a particular position
- `FindNode`: find a node with a given value
- `DeleteNode`: delete a node with a given value
- `DisplayList`: print all the nodes in the list

Inserting a New Node

- **`Node* InsertNode(int index, double x)`**
  - Insert a node with data equal to x after the index elements
  - If the insertion is successful
    - Return the inserted node
    - Otherwise, return `NULL`
  - If index is `< 0` or `>` length of the list, the insertion will fail

- Steps
  1. Locate the element at the index position
  2. Allocate memory for the new node, copy data into node
  3. Point the new node to its successor (next node)
  4. Point the new node's predecessor (preceding node) to the new node

Insertion After The Last Element (1)

- Suppose `last` points to the last element of the list
  - We can add a new last item x by doing this

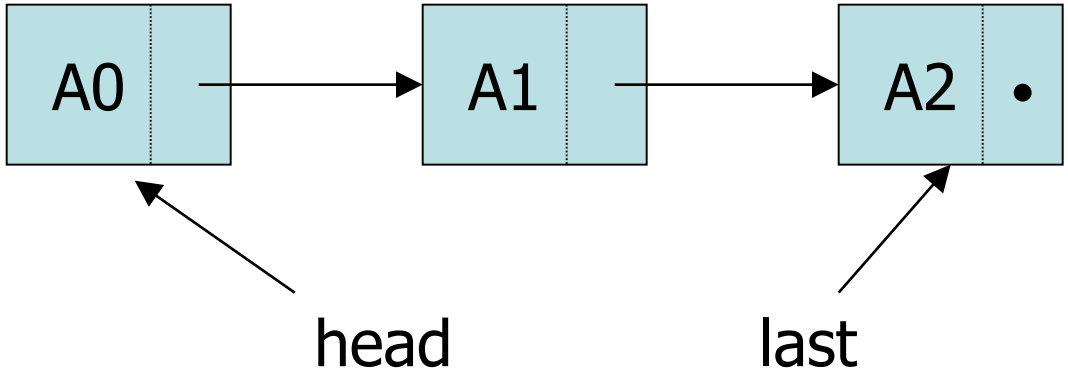


```
last->next = new Node();
last = last->next;
last->data = x;
last->next = null;
```

Steps

- Locate the index element
- Allocate memory for the new node
- Copy data into node
- Point the new node to its successor (next node)
- Point the new node's predecessor (preceding node) to the new node

Insertion After The Last Element (2)

- Suppose `last` points to the last element of the list
  - We can add a new last item x by doing this

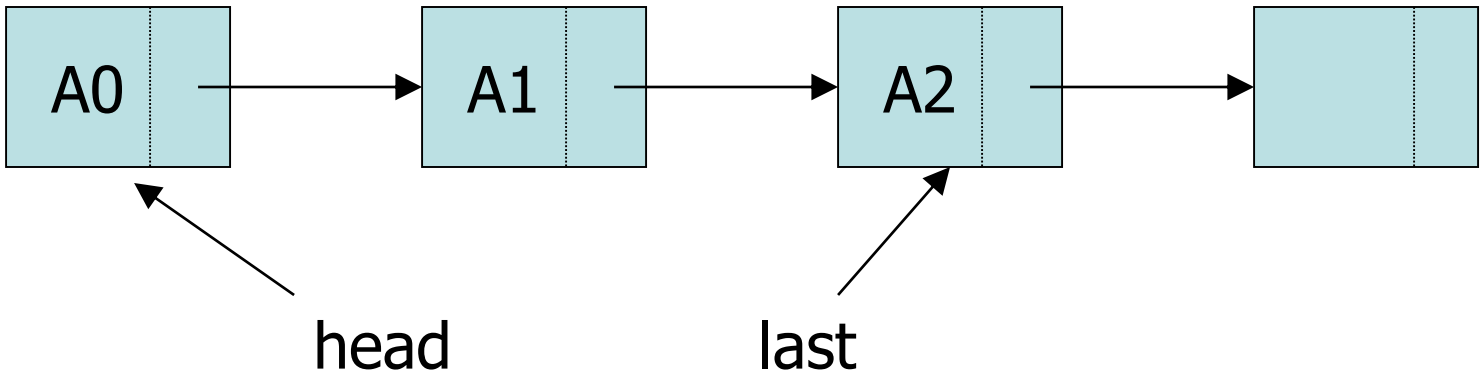


```
last->next = new Node();
last = last->next;
last->data = x;
last->next = null;
```

Steps
- Locate the index element
- Allocate memory for the new node
- Copy data into node
- Point the new node to its successor (next node)
- Point the new node's predecessor (preceding node) to the new node

Insertion After The Last Element (3)

- Suppose `last` points to the last element of the list
  - We can add a new last item x by doing this

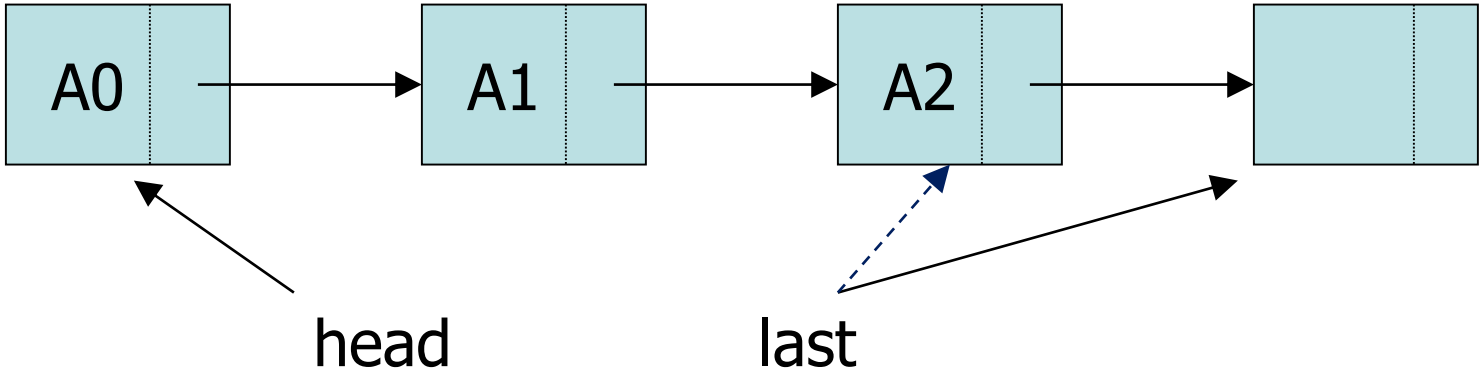


```
last->next = new Node();
last = last->next;
last->data = x;
last->next = null;
```

Steps

- Locate the index element
- Allocate memory for the new node
- Copy data into node
- Point the new node to its successor (next node)
- Point the new node's predecessor (preceding node) to the new node

Insertion After The Last Element (4)

- Suppose `last` points to the last element of the list
  - We can add a new last item x by doing this

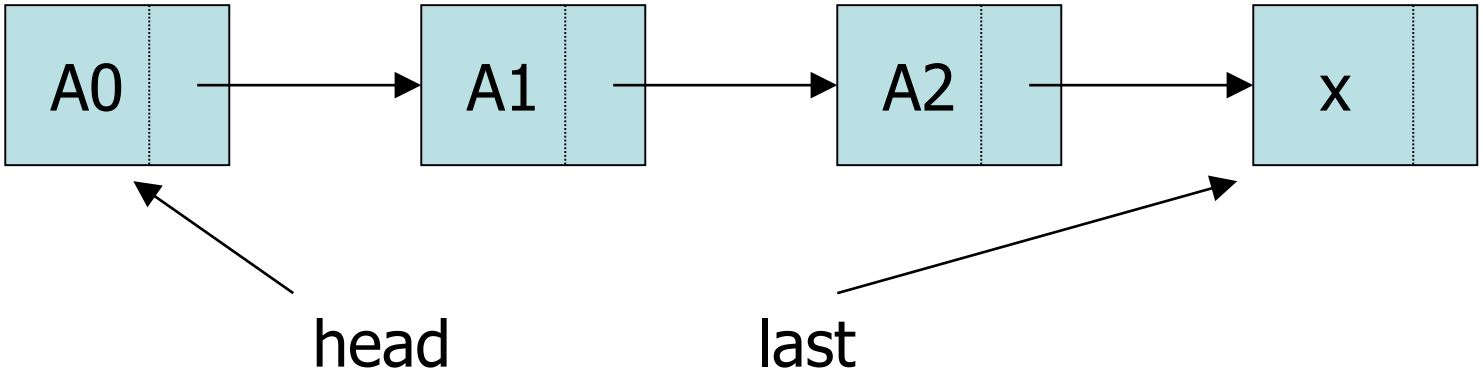


```
last->next = new Node();
last = last->next;
last->data = x;
last->next = null;
```

Steps
- Locate the index element
- Allocate memory for the new node
- Copy data into node
- Point the new node to its successor (next node)
- Point the new node's predecessor (preceding node) to the new node

Insertion After The Last Element (4)

- Suppose `last` points to the last element of the list
  - We can add a new last item x by doing this

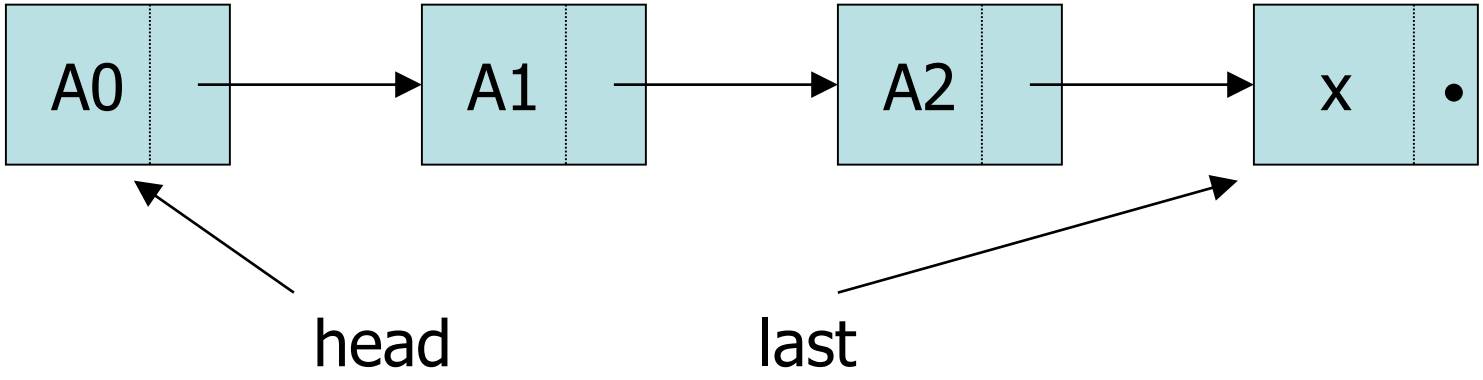


```
last->next = new Node();
last = last->next;
last->data = x;
last->next = null;
```

Steps
- Locate the index element
- Allocate memory for the new node
- Copy data into node
- Point the new node to its successor (next node)
- Point the new node's predecessor (preceding node) to the new node

Insertion At The Middle (1)

- Suppose `current` points to the middle element of the list
  - We can add a new last item x by doing this

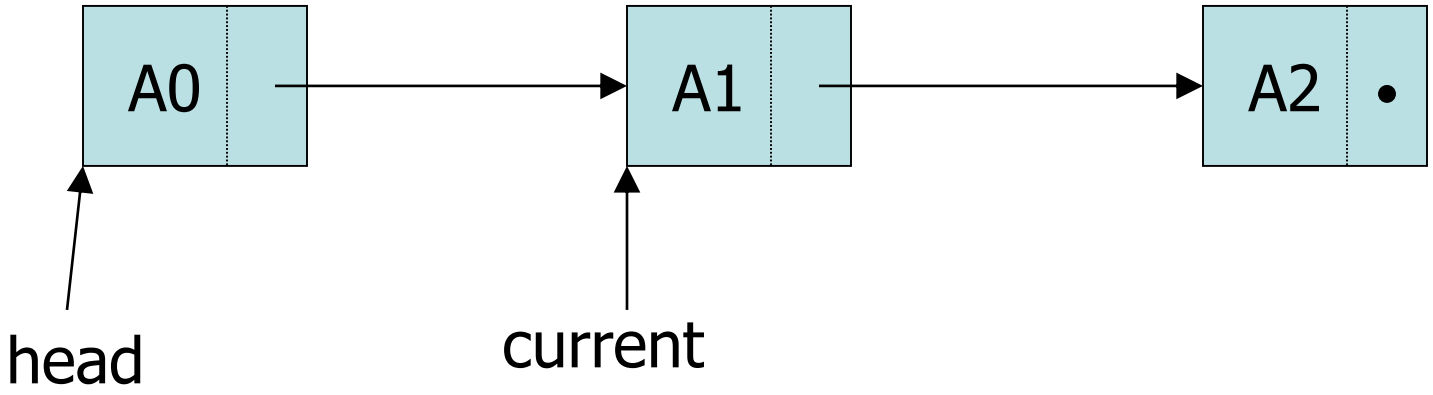


```
tmp = new Node();
tmp->data= x;
tmp->next = current->next;
current->next = tmp;
```

Insertion At The Middle (1)

- Suppose `current` points to the middle element of the list
  - We can add a new last item x by doing this

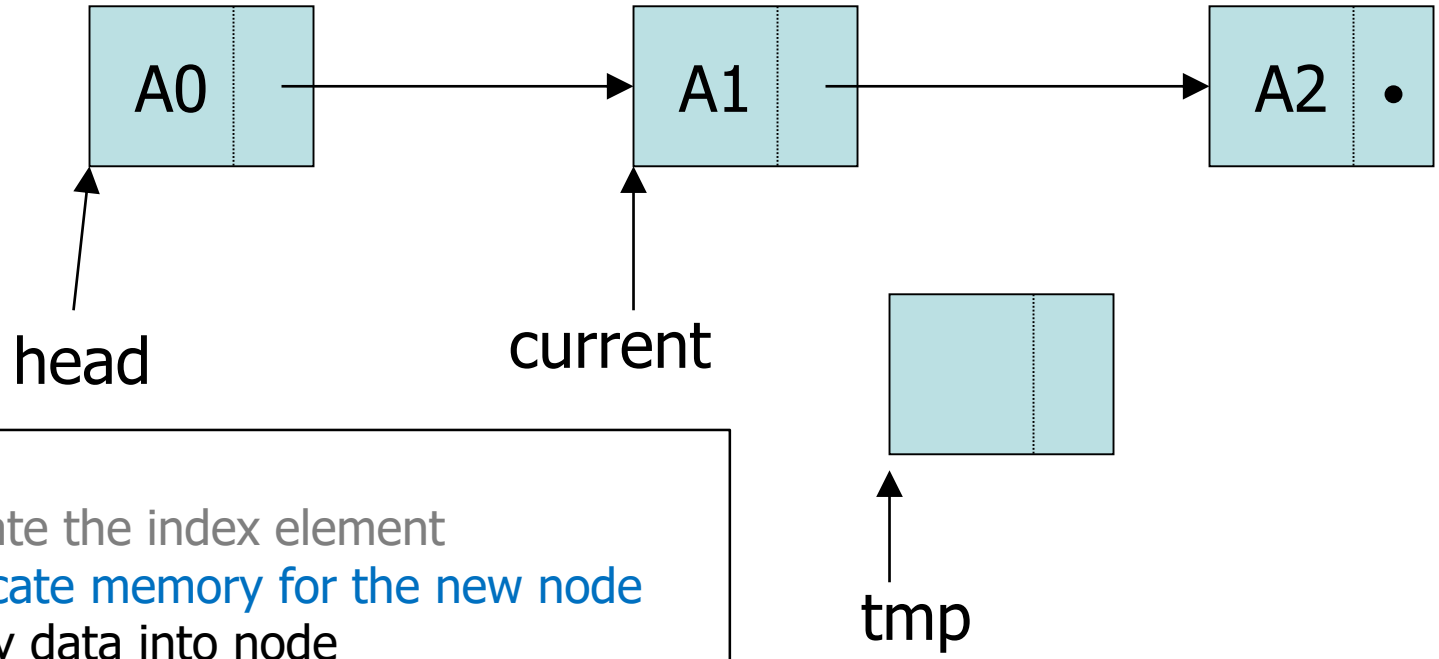

Steps
- Locate the index element
- Allocate memory for the new node
- Copy data into node
- Point the new node to its successor (next node)
- Point the new node's predecessor (preceding node) to the new node

```
tmp = new Node();
tmp->data= x;
tmp->next = current->next;
current->next = tmp;
```

Insertion At The Middle (1)

- Suppose `current` points to the middle element of the list
  - We can add a new last item x by doing this

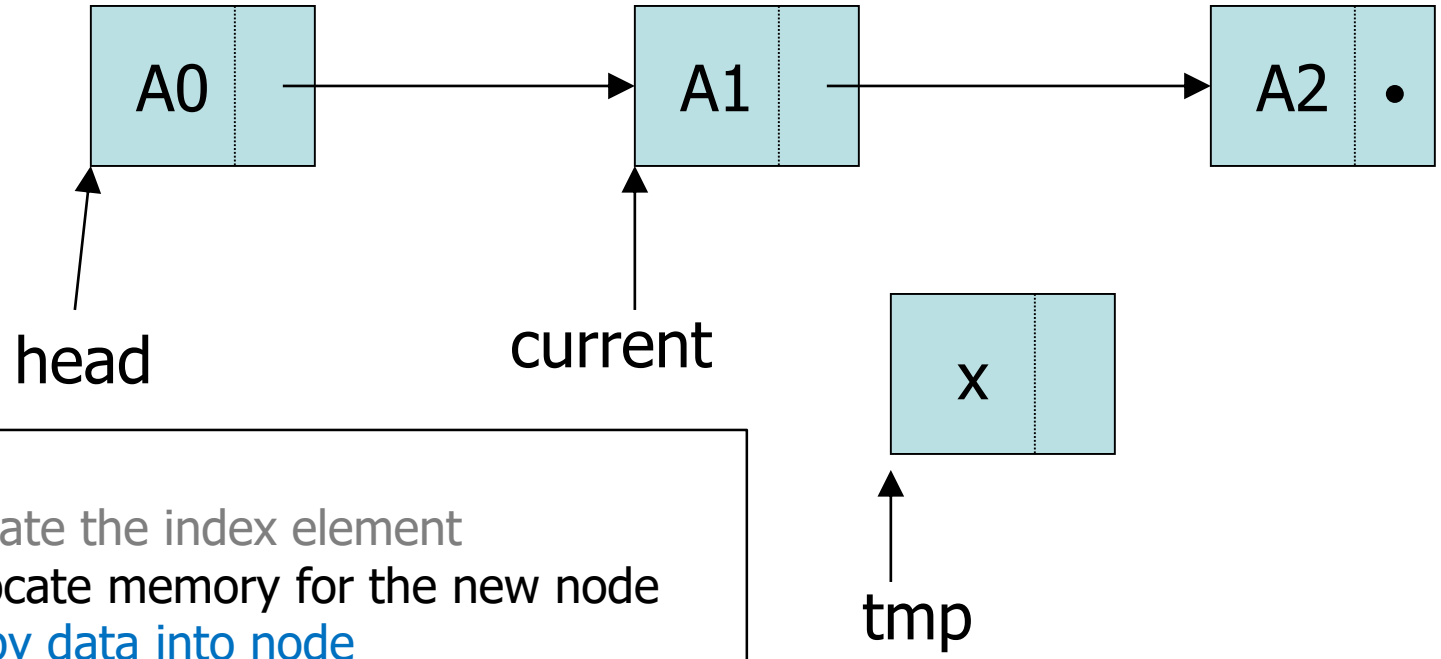

Steps
- Locate the index element
- Allocate memory for the new node
- Copy data into node
- Point the new node to its successor (next node)
- Point the new node's predecessor (preceding node) to the new node

```
tmp = new Node();
tmp->data= x;
tmp->next = current->next;
current->next = tmp;
```

Insertion At The Middle (1)

- Suppose `current` points to the middle element of the list
  - We can add a new last item x by doing this

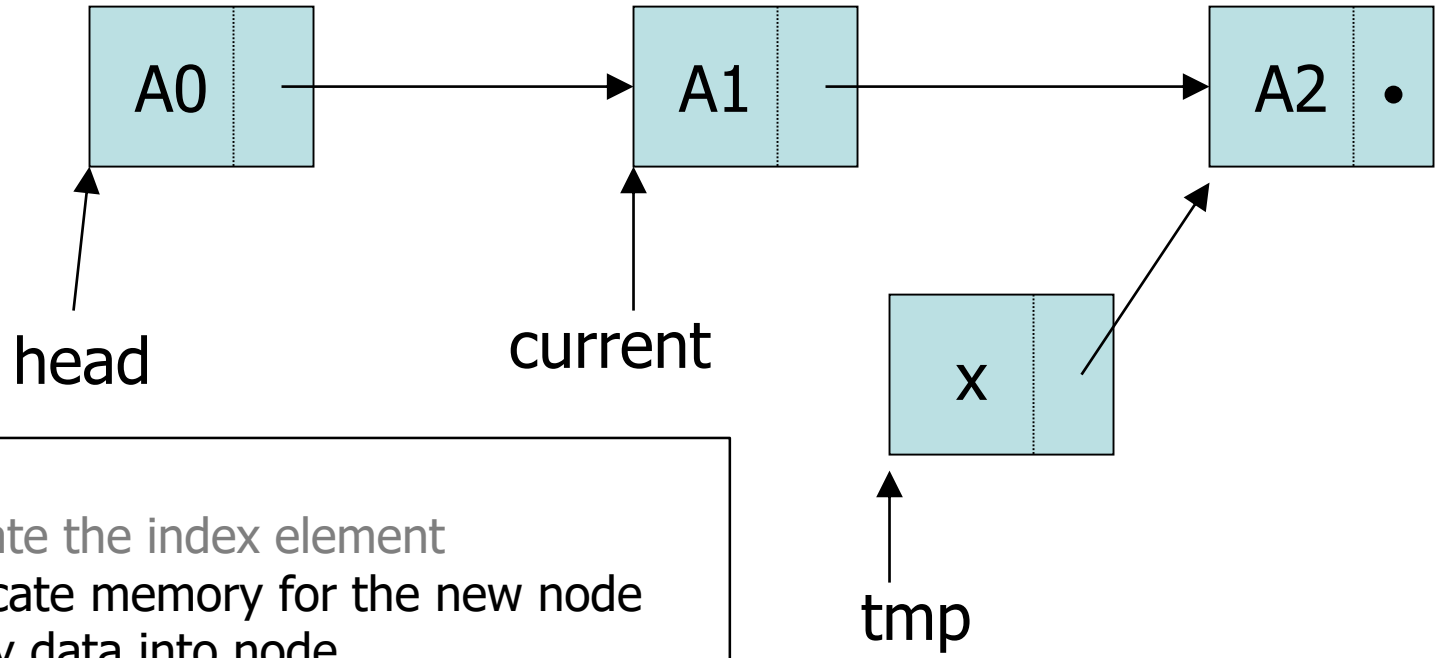

Steps
- Locate the index element
- Allocate memory for the new node
- Copy data into node
- Point the new node to its successor (next node)
- Point the new node's predecessor (preceding node) to the new node

```
tmp = new Node();
tmp->data= x;
tmp->next = current->next;
current->next = tmp;
```

Insertion At The Middle (1)

- Suppose `current` points to the middle element of the list
  - We can add a new last item x by doing this

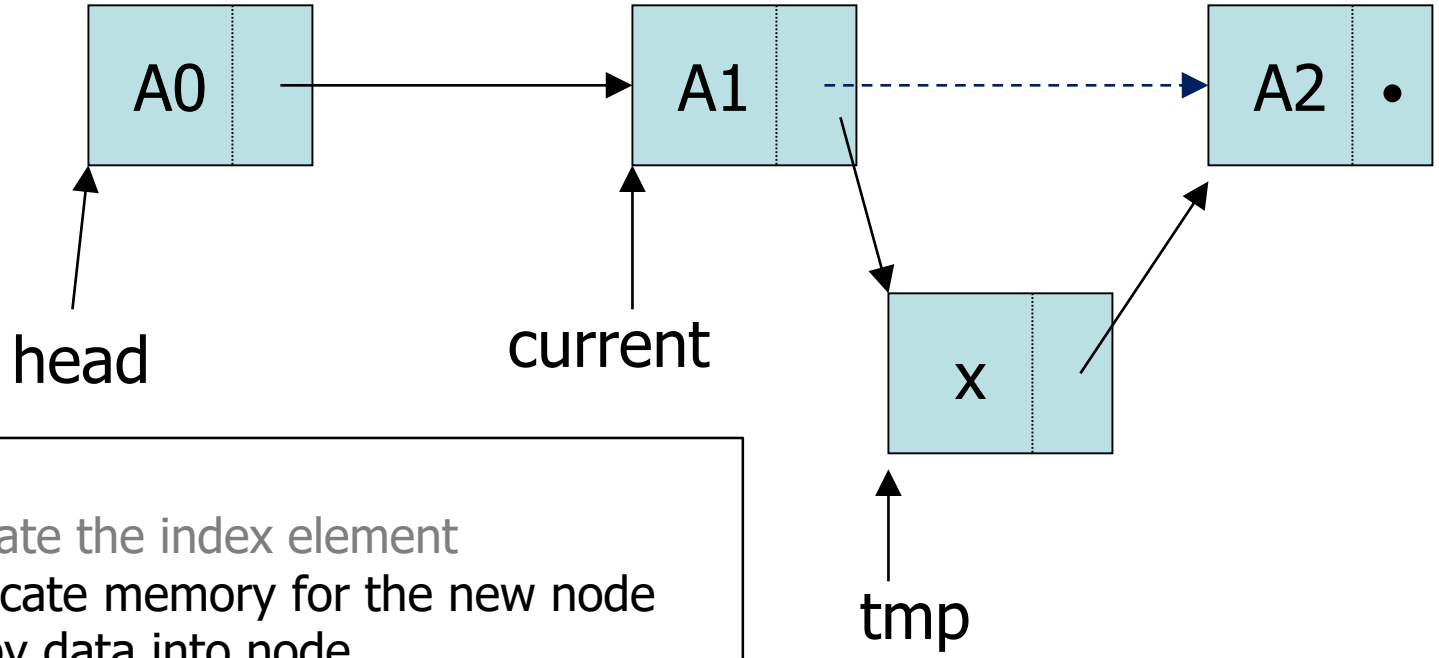

Steps
- Locate the index element
- Allocate memory for the new node
- Copy data into node
- Point the new node to its successor (next node)
- Point the new node's predecessor (preceding node) to the new node

```
tmp = new Node();
tmp->data= x;
tmp->next = current->next;
current->next = tmp;
```

Inserting a New Node (2)

- Possible cases of `InsertNode`
  1. Insert into an empty list
  2. Insert in front
  3. Insert at back
  4. Insert in middle

- In fact, only need to handle two cases
  - Insert as the first node (Case 1 and Case 2)
  - Insert in the middle or at the end of the list (Case 3 and Case 4)

Inserting a New Node (3)

```
Node* List::InsertNode(int index, double x) {
        if (index < 0) return NULL;

        int currIndex   =   1;
        Node* currNode  =   head;
        while (currNode && index > currIndex) {
                currNode  = currNode->next;
                currIndex++;
        }
        if (index > 0 && currNode == NULL) return NULL;

        Node* newNode =  new Node;
        newNode->data =  x;
        if (index == 0) {
                newNode->next  =    head; //basically making it null
                head            =   newNode;
        }
        else {
                newNode->next   =   currNode->next;
                currNode->next  =   newNode;
        }
        return newNode;
}
```

Try to locate index'th node. If it doesn't exist, return NULL

Inserting a New Node (3)

```
Node* List::InsertNode(int index, double x) {
        if (index < 0) return NULL;

        int currIndex   =   1;
        Node* currNode  =   head;
        while (currNode && index > currIndex) {
                currNode  = currNode->next;
                currIndex++;
        }
        if (index > 0 && currNode == NULL) return NULL;

        Node* newNode =  new Node;
        newNode->data =  x;
        if (index == 0) {
                newNode->next  =    head;
                head            =   newNode;
        }
        else {
                newNode->next   =   currNode->next;
                currNode->next  =   newNode;
        }
        return newNode;
}
```

Try to locate index'th node. If it doesn't exist, return NULL

Create a new node

Inserting a New Node (3)

```
Node* List::InsertNode(int index, double x) {
        if (index < 0) return NULL;

        int currIndex   =   1;
        Node* currNode  =   head;
        while (currNode && index > currIndex) {
                currNode  = currNode->next;
                currIndex++;
        }
        if (index > 0 && currNode == NULL) return NULL;

        Node* newNode =  new Node;
        newNode->data =  x;
        if (index == 0) {
                newNode->next  =    head;
                head            =   newNode;
        }
        else {
                newNode->next   =   currNode->next;
                currNode->next  =   newNode;
        }
        return newNode;
}
```

Try to locate index'th node. If it doesn't exist, return NULL

Create a new node

Insert as first element

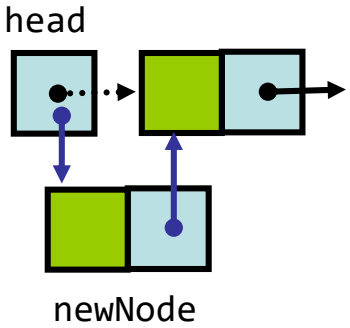

Inserting a New Node (3)

```
Node* List::InsertNode(int index, double x) {
        if (index < 0) return NULL;

        int currIndex   =   1;
        Node* currNode  =   head;
        while (currNode && index > currIndex) {
                currNode  = currNode->next;
                currIndex++;
        }
        if (index > 0 && currNode == NULL) return NULL;

        Node* newNode =  new Node;
        newNode->data =  x;
        if (index == 0) {
                newNode->next  =    head;
                head            =   newNode;
        }
        else {
                newNode->next   =   currNode->next;
                currNode->next  =   newNode;
        }
        return newNode;
}
```

Try to locate index'th node. If it doesn't exist, return NULL

Create a new node

Insert after `currNode`

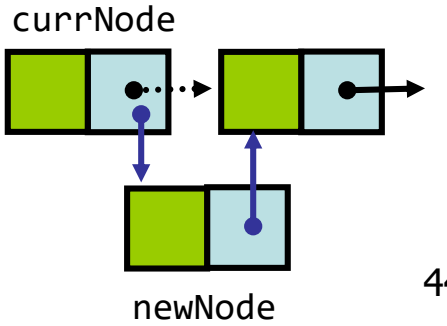

Finding a Node

- **`int FindNode(double x)`**
  - Search for a node with the value equal to x in the list
  - If such a node is found
    - Return its position
    - Otherwise, return 0

```
int List::FindNode(double x) {
        Node* currNode = head;
        int currIndex   = 1;
        while (currNode && currNode->data != x) {
                currNode = currNode->next;
                currIndex++;
        }
        if (currNode) return currIndex;

        return 0;
}
```

Deleting a Node – Example (1)

- Deleting item A1 from the list

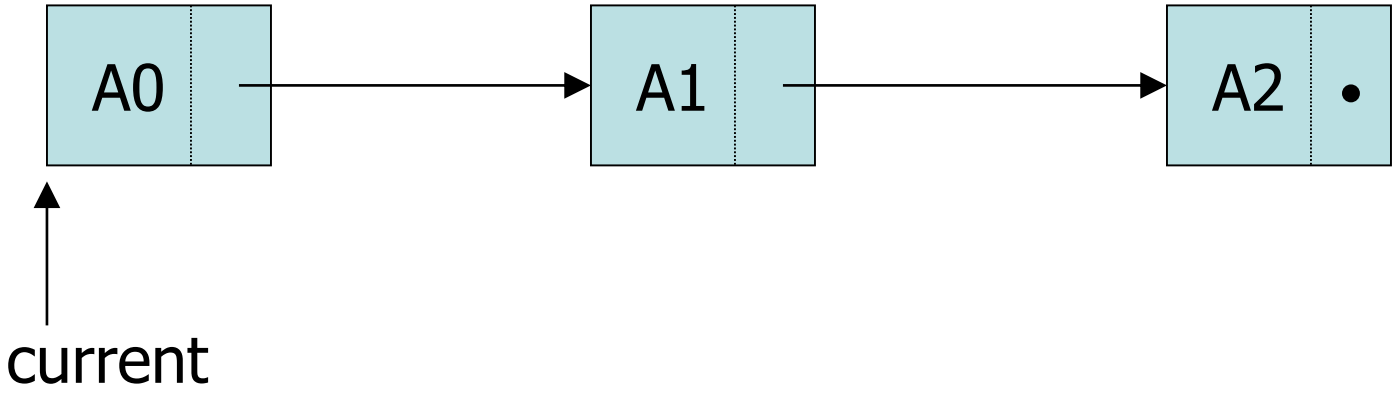

Deleting a Node – Example (2)

- Deleting item A1 from the list

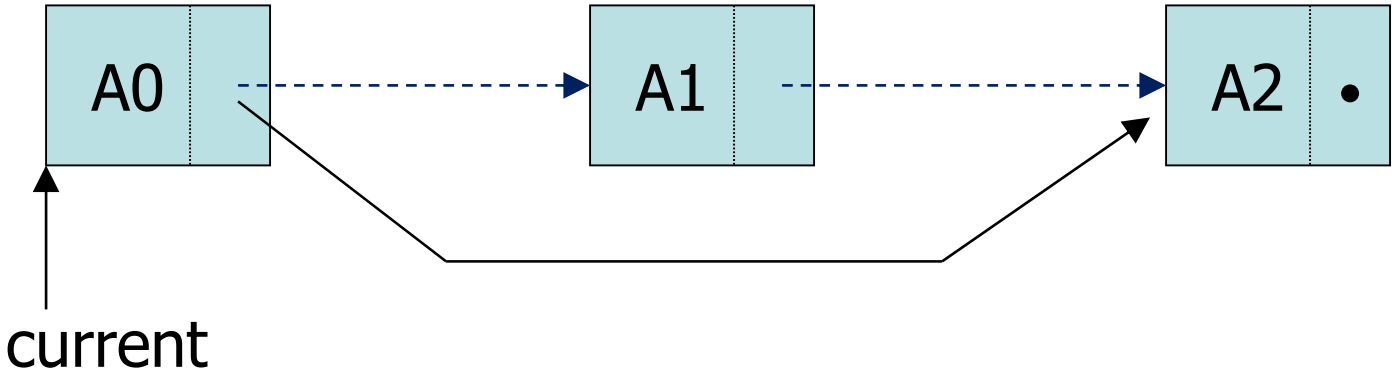


```
current->next = current->next->next;
```

Deleting a Node – Example (3)

- Deleting item A1 from the list

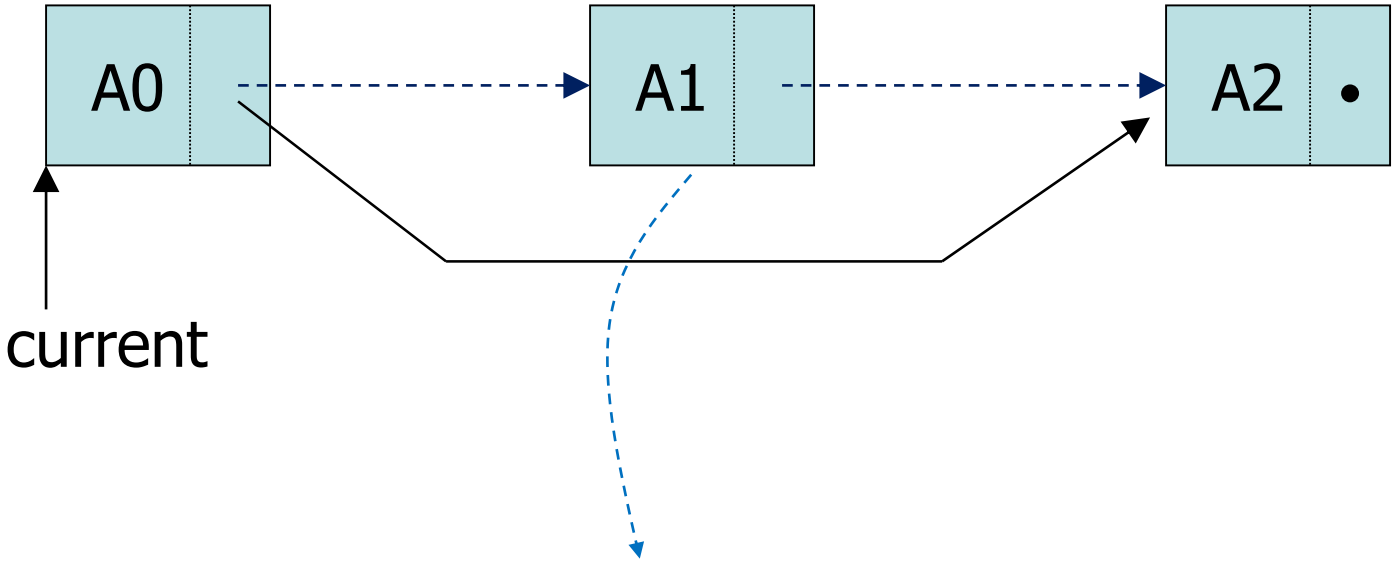


```
current->next = current->next->next;
```

→ Memory Leak

Deleting a Node – Example (4)

- Deleting item A1 from the list

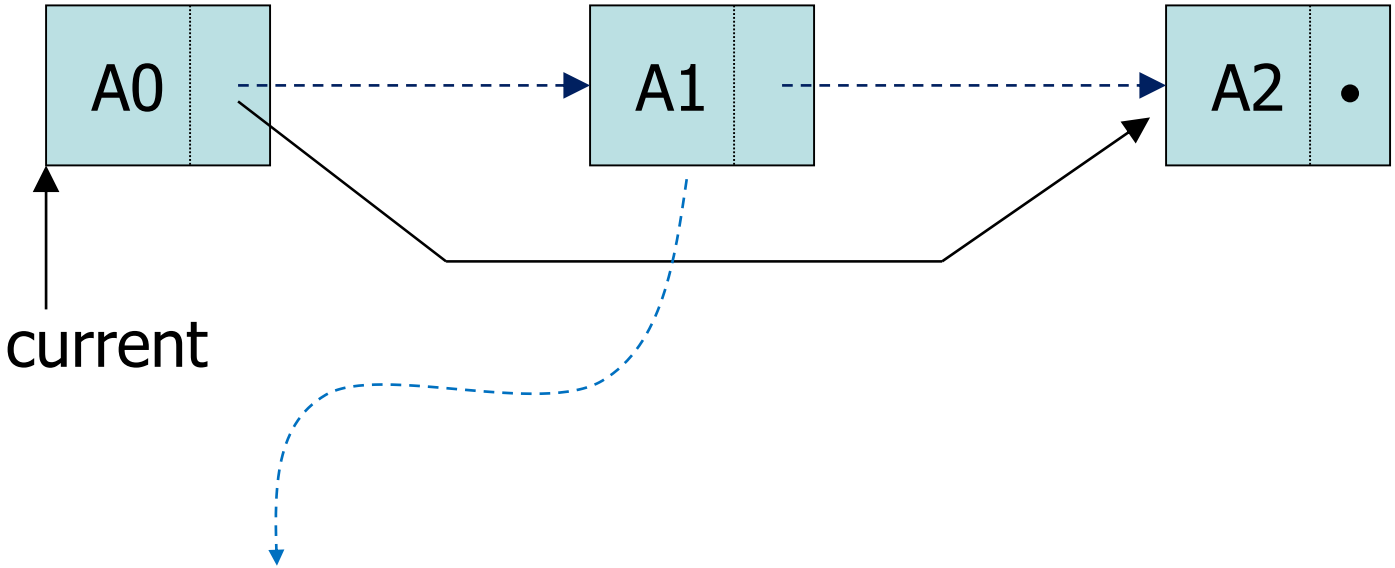


```
Node *deletedNode = current->next;
current->next = current->next->next;
delete deletedNode;
```

Deleting a Node

- **`int DeleteNode(double x)`**
  - Delete a node with the value equal to x from the list
  - If such a node is found return its position
    - Otherwise, return 0

- Steps
  - Find the desirable node (similar to `FindNode`)
  - Release the memory occupied by the found node
  - Set the pointer of the predecessor of the found node to the successor of the found node

- Like `InsertNode`, there are two special cases
  - Delete first node
  - Delete the node in middle or at the end of the list

Deleting a Node – Implementation (1)

```
int List::DeleteNode(double x) {
        Node* prevNode     = NULL;
        Node* currNode     = head;
        int currIndex      = 1;
        while (currNode && currNode->data != x) {
                prevNode   = currNode;
                currNode   = currNode->next;
                currIndex++;
        }
        if (currNode) {
                if (prevNode) {
                        prevNode->next     =  currNode->next;
                        delete currNode;
                }
                else {
                        head  =  currNode->next;
                        delete currNode;
                }
                return currIndex;
        }
        return 0;
}
```

Try to find node with its value equal to x.

Deleting a Node – Implementation (2)

```
int List::DeleteNode(double x) {
        Node* prevNode     = NULL;
        Node* currNode     = head;
        int currIndex      = 1;
        while (currNode && currNode->data != x) {
                prevNode   = currNode;
                currNode   = currNode->next;
                currIndex++;
        }
        if (currNode) {
                if (prevNode) {
                        prevNode->next     =  currNode->next;
                        delete currNode;
                }
                else {
                        head  =  currNode->next;
                        delete currNode;
                }
                return currIndex;
        }
        return 0;
}
```

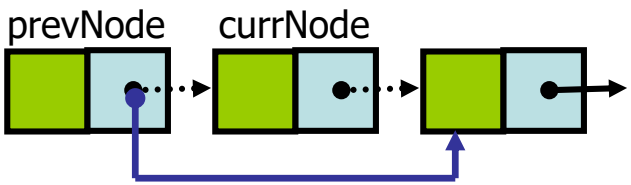

Deleting a Node – Implementation (3)

```
int List::DeleteNode(double x) {
        Node* prevNode     = NULL;
        Node* currNode     = head;
        int currIndex      = 1;
        while (currNode && currNode->data != x) {
                prevNode   = currNode;
                currNode   = currNode->next;
                currIndex++;
        }
        if (currNode) {
                if (prevNode) {
                        prevNode->next     =  currNode->next;
                        delete currNode;
                }
                else {
                        head  =  currNode->next;
                        delete currNode;
                }
                return currIndex;
        }
        return 0;
}
```

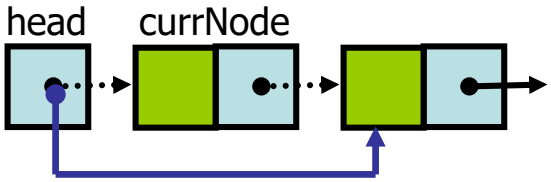

Printing All The Elements

- **`void DisplayList(void)`**
  - Print the data of all the elements
  - Print the number of the nodes in the list

```
void List::DisplayList()
{
   int num     = 0;
   Node* currNode =   head;
   while (currNode != NULL){
      cout << currNode->data << endl;
      currNode = currNode->next;
      num++;
   }
   cout << "Number of nodes in the list: " << num << endl;
}
```

Destroying The List

- **`~List(void)`**
  - Use the destructor to release all the memory used by the list
  - Step through the list and delete each node one by one

```
List::~List(void) {
   Node* currNode = head;
   Node* nextNode = NULL;
   while (currNode != NULL)
   {
      nextNode  =  currNode->next;
      delete currNode; // destroy the current node
      currNode  =  nextNode;
   }
}
```

Using List (1)

```
int main(void)
{
   List list;
   list.InsertNode(0, 7.0);      // successful
   list.InsertNode(1, 5.0);      // successful
   list.InsertNode(-1, 5.0);     // unsuccessful
   list.InsertNode(0, 6.0);      // successful
   list.InsertNode(8, 4.0);      // unsuccessful
   // print all the elements
   list.DisplayList();





   return 0;
}
```

Output:
6
7
5
Number of nodes in the list: 3

Using List (2)

```
int main(void)
{
   List list;
   list.InsertNode(0, 7.0);      // successful
   list.InsertNode(1, 5.0);      // successful
   list.InsertNode(-1, 5.0);     // unsuccessful
   list.InsertNode(0, 6.0);      // successful
   list.InsertNode(8, 4.0);      // unsuccessful
   // print all the elements
   list.DisplayList();
   if(list.FindNode(5.0) > 0)    cout << "5.0 found" << endl;
   else                          cout << "5.0 not found" << endl;
   if(list.FindNode(4.5) > 0)    cout << "4.5 found" << endl;
   else                          cout << "4.5 not found" << endl;


   return 0;
}
```

Output:
6
7
5
Number of nodes in the list: 3
5.0 found
4.5 not found

Using List

```
int main(void)
{
   List list;
   list.InsertNode(0, 7.0);      // successful
   list.InsertNode(1, 5.0);      // successful
   list.InsertNode(-1, 5.0);     // unsuccessful
   list.InsertNode(0, 6.0);      // successful
   list.InsertNode(8, 4.0);      // unsuccessful
   // print all the elements
   list.DisplayList();
   if(list.FindNode(5.0) > 0)    cout << "5.0 found" << endl;
   else                          cout << "5.0 not found" << endl;
   if(list.FindNode(4.5) > 0)    cout << "4.5 found" << endl;
   else                          cout << "4.5 not found" << endl;
   list.DeleteNode(7.0);
   list.DisplayList();
   return 0;
}
```

Output:
6
7
5
Number of nodes in the list: 3
5.0 found
4.5 not found
6
5
Number of nodes in the list: 2

Any Question So Far?